STREAM TABLE KIT

INSTRUCTION GUIDE

INTRODUCTION

The Stream Table Kit is designed to provide a means of exploring and discovering various geologic principles and processes. Since it is difficult to be in the field to view all types of geologic features and because very few geologic processes move at a rate that can be witnessed, the Stream Table can be a very important laboratory tool in the study of physical geology. The following activities involve observing and recording data from which conclusions can be drawn in regard to geologic concepts and their application in nature. Time requirement: 180 minutes.

MATERIALS SUPPLIED WITH THIS KIT:

Stream Table 48-in. x 14-in.
Trough for velocity experiments
Plastic stream table support
Outlet pipe assembly
*6 foot plastic hose
Adjustable clamp for inlet hose

ADDITIONAL MATERIALS NEEDED:

Pail
Protractor
Cork or paper
Sand

*The kit has been furnished with one 6-foot piece of plastic hose, which can be cut into two pieces to provide the inlet and outlet hoses.

ASSEMBLY INSTRUCTIONS:

STEP 1

Attach the outlet pipe assembly as indicated in Figure 1. Insert the threaded pipe through the hole in the Stream Table, and place a rubber washer on each side of the hole. Tighten the round brass nuts on both sides of the Stream Table.

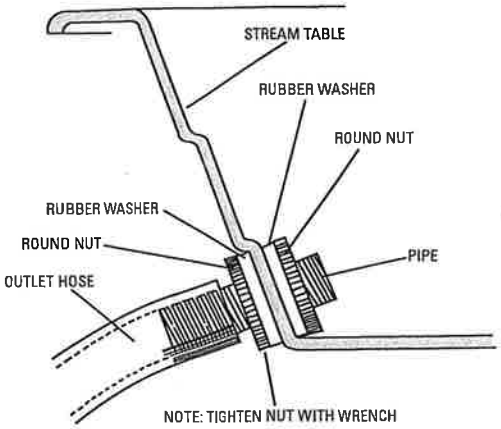

FIGURE 1

STEP 2

Force one piece of plastic outlet hose over the brass pipe. The outlet hose should be placed in a drain outlet or pail. See Figure 2.

STEP 3

Attach the other piece of plastic hose to a water faucet, recirculating pump, or a siphon system. The flow of water may be regulated with the adjustable clamp.

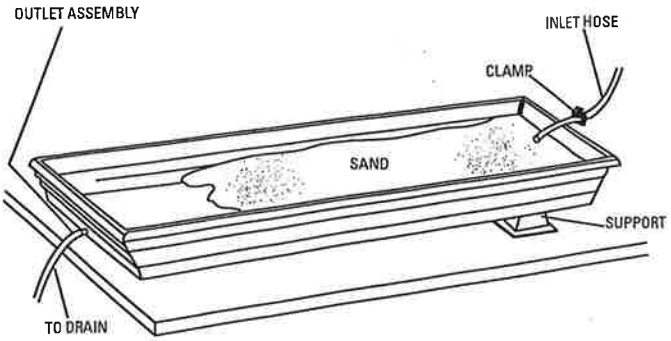

FIGURE 2

PART 1 - EXAMINING VARIABLES THAT AFFECT STREAM VELOCITY

PROCEDURE

In order to scientifically study in the classroom the variables that affect stream velocity, a model of a stream channel (trough) is used. The two variables to be examined are the slope of the channel and the rate of discharge of the stream. To test for slope, place the trough on the floor of the Stream Table. Elevate the closed end of the trough to a low angle of about 3 to 5 degrees. This angle can be measured with a protractor if students wish to graph their results. Place one end of a siphon tube in a pail of water elevated above the raised portion of the trough. (See Figure 3) Begin the siphon, directing the water down the trough. Use the clamp to adjust the water to a slow, steady flow. Do not touch the clamp once this portion of the experiment has begun.

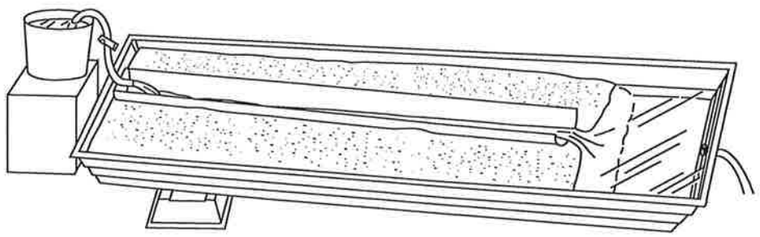

FIGURE 3

Break up small bits of cork or paper. Drop them one at a time into the miniature stream at the uppermost part of the channel, and time their descent. Do this at least three times. (An average must be taken because the source of error in any one descent is so great.) The average time of descent should be converted into the number of centimeters traveled per second. Assume the average time is three seconds. Since the trough is 90 centimeters in length, the water must be moving at 30 centimeters per second.

Place the gutter at a higher angle (8 to 10 degrees) and calculate three more descent readings, determining the average and then finding the velocity.

Set the trough at a still higher angle (approximately 20 degrees) and follow the same procedure outlined above. Study the results and draw a conclusion as to how the slope of the channel affects stream velocity. (A graph can be constructed showing the slope versus the velocity.)

To test how the rate of discharge of a stream affects the stream's velocity, place the trough at an angle of approximately 15 degrees. Adjust the clamp on the siphon tube to a very low flow and direct the water down the channel. Again, take three descent readings. Calculate the average time and convert it into a velocity reading. Readjust the clamp to allow an intermediate flow of water leaving the trough at the same angle. Take three more descent readings and find the velocity. Then, remove the clamp, allowing maximum flow, and follow the identical procedure. Formulate a conclusion as to how the volume of flow (discharge) affects the velocity of the stream. (If a more exact picture of this velocity change is sought, the three flows or discharge can be measured in cubic centimeters per second, and a graph constructed showing the change of discharge versus velocity.)

EVALUATION QUESTIONS

1. What is the relationship between the slope of the stream channel and the velocity of the stream?
2. What is the relationship between the discharge of a stream and its velocity?
3. Which of the following streams will have the greatest velocity: high discharge, gentle slope; high discharge, steep slope; low discharge, gentle slope; low discharge, steep slope?
4. Name other factors that will affect the velocity of a stream.
5. If the cork descended the 90 centimeter channel in 41 ½ seconds, what would its velocity be?

PART 2 - DETERMINING THE LOAD OF A STREAM

PROCEDURE

The load of a stream can be determined as the amount of earth material moving past a fixed cross-section of a stream channel in one unit of time. This is determined by the velocity of the water and the amount of weathered earth material available. In this exercise it is assumed that the amount of weathered earth material is inexhaustible.

To examine how the velocity affects the load of a stream, set the trough at a low angle (5 degrees) in the Stream Table. Adjust the clamp to allow a medium flow of water through the siphon. Carefully measure 100 cubic centimeters of sand and spread it evenly along the entire length of the trough. Direct the flow of water down the trough and record the time it takes to wash the trough clean. This can be converted into cubic centimeters of sand per second by dividing the number of seconds into 100 cubic centimeters.

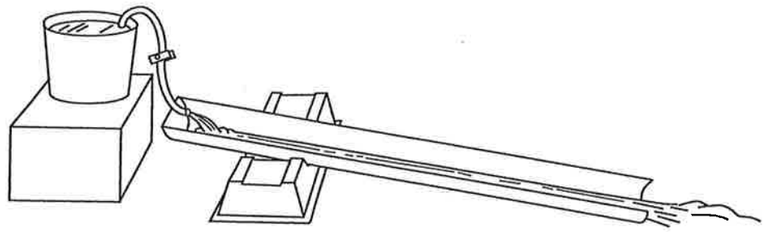

FIGURE 4

Change the velocity by changing the angle of the trough to 10 degrees. Again measure 100 cubic centimeters of sand and repeat the procedure described above. Ascertain the new load of this miniature stream in cubic centimeters of sand per second.

Now, change the angle of the trough to 20 degrees, repeating the same procedure. Formulate a statement as to how a change in velocity affects the load of a stream. (This relationship can be graphed if the velocity readings from Part 1 are used.)

EVALUATION QUESTIONS

1. Provided there is abundant loose earth material, what is the relationship between the velocity of a stream and its load?
2. Why do mountain streams with steep slopes and high velocity have a much smaller load than lowland streams with gentle slopes and low velocity?
3. If it takes 25 seconds to wash the 100 cubic centimeters of sand from the gutter, what is the rate of movement?

4. From your observation of the sand being washed from the gutter, how does velocity affect the size of the particles that can be moved?

5. During what time of year would most stream erosion occur?

PART 3 - EXPLORING THE CHANGES IN A STREAM CHANNEL

PROCEDURE

Fill the two-thirds of the Stream Table opposite the drain with sand. Elevate this portion to its maximum height by sliding the support under the Stream Table toward the center. Place the siphon tube in a bucket elevated above the upper portion of the stream table (see Figure 3) and adjust the clamp to a medium flow. Carve a narrow trench the entire length of the sand, placing the siphon tubing at the upper end.

Measure the width of this trench at its head, center, and mouth. Direct the flow of water down the channel for two minutes and remove the hose. Re-measure the channel width at the head, center and mouth.

Change the elevation of the Stream Table to its lowest level by removing the support. Allow the water to flow down the channel for 15 minutes. Observe how the stream channel changes. Turn the water off and re-measure the channel.

EVALUATION QUESTIONS

1. How did the path of the stream change?
2. Why does this phenomenon occur?
3. Where did the channel's width change most rapidly?
4. What land form develops at the mouth of this stream? Why?
